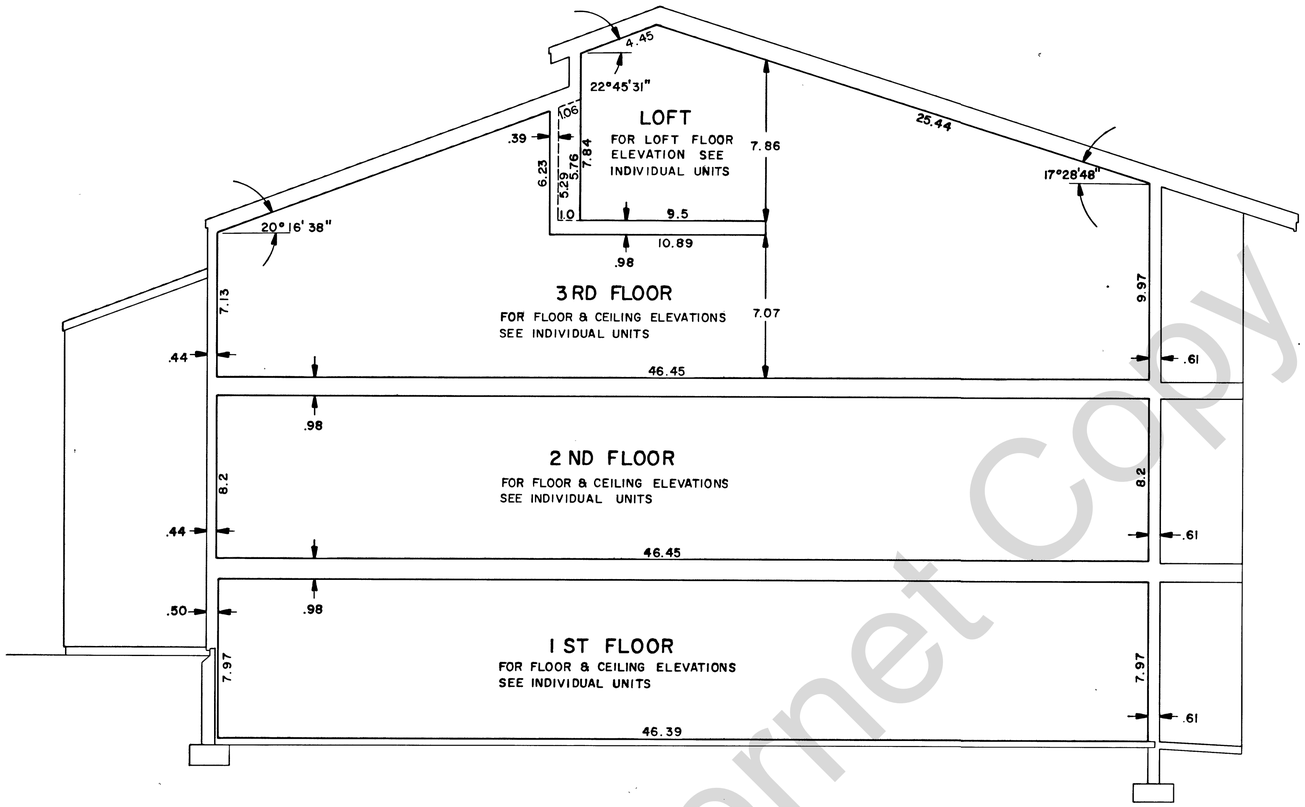

A/4 SECTION
SCALE: 1" = 4'

NOTES APPLICABLE TO ALL SHEETS

1. C.E. = DENOTES CEILING ELEVATIONS.
2. F.E. = DENOTES FLOOR ELEVATIONS. ALL ELEVATIONS ARE OFFICIAL U.S.G.S. DATUM.
3. ALL INTERIOR DIMENSIONS RUNNING TO A WALL BETWEEN UNITS ARE TO THE CENTER OF THAT WALL UNLESS OTHERWISE SHOWN, ALL OTHER INTERIOR DIMENSIONS ARE TO THE INTERIOR SURFACE OF THE WALL CONCERNED.
4. NUMBERS 1A THROUGH 6B ARE UNIT NUMBERS
5. ALL AREAS NOT LABELED WITH UNIT NUMBERS ARE COMMON OR LIMITED COMMON AREAS AND FACILITIES.
6. ———— INDICATES HORIZONTAL OR VERTICAL PERIMETER OF UNITS.
7. EACH BALCONY & PATIO IS A LIMITED COMMON AREA AND FACILITY APPURTENANT TO THE SINGLE UNIT OR TO THE TWO UNITS WITH WHICH IT IS CONTIGUOUS.
8. DIMENSIONS TAKE PREFERENCE OVER SCALE.

Internet Copy

RECORD OF SURVEY MAP OF
SWEETWATER PARK
MULTI-RESORT CONDOMINIUM FACILITY
PHASE IV
AAA ENGINEERING & DRAFTING, INC.
SALT LAKE CITY, UTAH

RECORDED NO. _____

STATE OF UTAH, COUNTY OF RICH, RECORDED AT THE REQUEST OF _____
DATE _____ TIME _____ BOOK _____ PAGE _____.
FEE _____ _____ COUNTY RECORDER