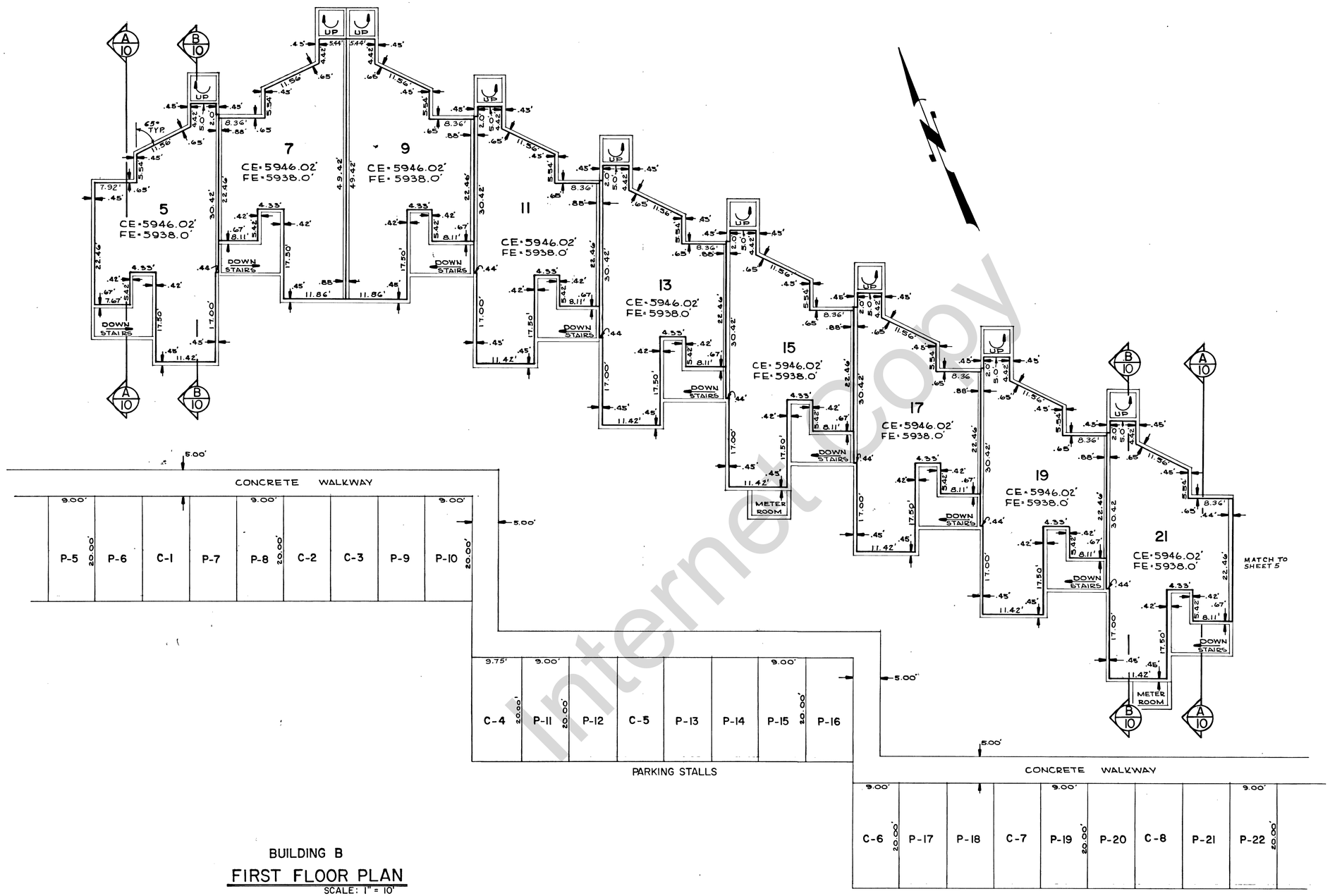

BUILDING B

FIRST FLOOR PLAN

SCALE: 1" = 10'

Internet Copy

SHEET 4 OF 10

RECORDED NO. 112,853

STATE OF UTAH, COUNTY OF RICH, RECORDED AT THE REQUEST OF Sweetwater, Inc.

DATE 9/22/72 TIME 3:33 BOOK H2 PAGE 336

FEE $11.10

COUNTY RECORDER

RECORD OF SURVEY MAP OF
SWEETWATER PARK
BEACH RESORT CONDOMINIUM
PROJECT NO. 1
AAA ENGINEERING & SURVEYING, INC.
SALT LAKE CITY, UTAH