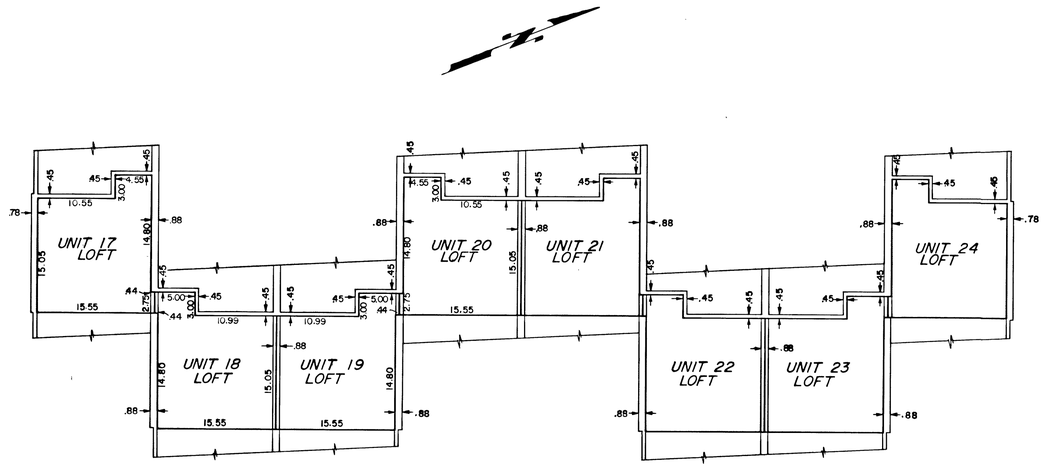

BUILDING "A" LOFT FLOOR PLAN

SCALE 1" = 10'

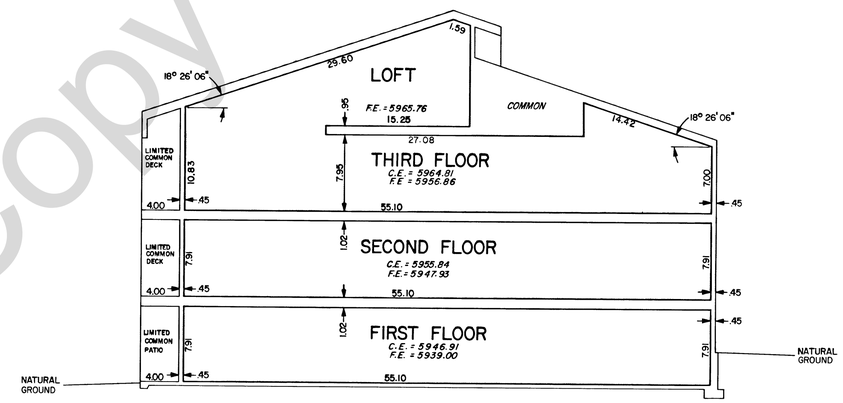

SECTION A/5

SCALE 1" = 8'

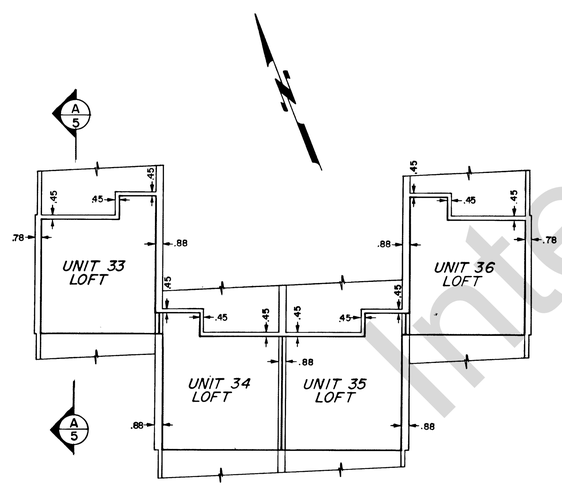

BUILDING "B" LOFT FLOOR PLAN

SCALE 1" = 10'

NOTE:

1. DIMENSIONS SHOWN ARE TYPICAL FOR ALL RESPECTIVE UNITS.
2. F.E. DENOTES FINISHED FLOOR ELEVATION.
3. C.E. DENOTES FINISHED CEILING ELEVATION.

Internet Copy

SHEET 5 OF 5

RECORD OF SURVEY MAP OF

SWEETWATER BEAR LAKE CONDOSHARE PROJECT III
RICH COUNTY, UTAH

AAA ENGINEERING & DRAFTING, INC.
SALT LAKE CITY, UTAH

RECORDED NO. _____

STATE OF UTAH, COUNTY OF RICH, RECORDED AT
THE REQUEST OF _____
DATE _____ TIME _____ BOOK _____ PAGE _____
FEE _____ _____
COUNTY RECORDER