BLUEWATER RESORT CONDOMINIUMS

A PART OF THE SOUTHEAST QUARTER OF
SECTION 33, TOWNSHIP 15 NORTH, RANGE 5 EAST S.L.B.&M.
GARDEN CITY, RICH COUNTY, UTAH
APRIL 2004

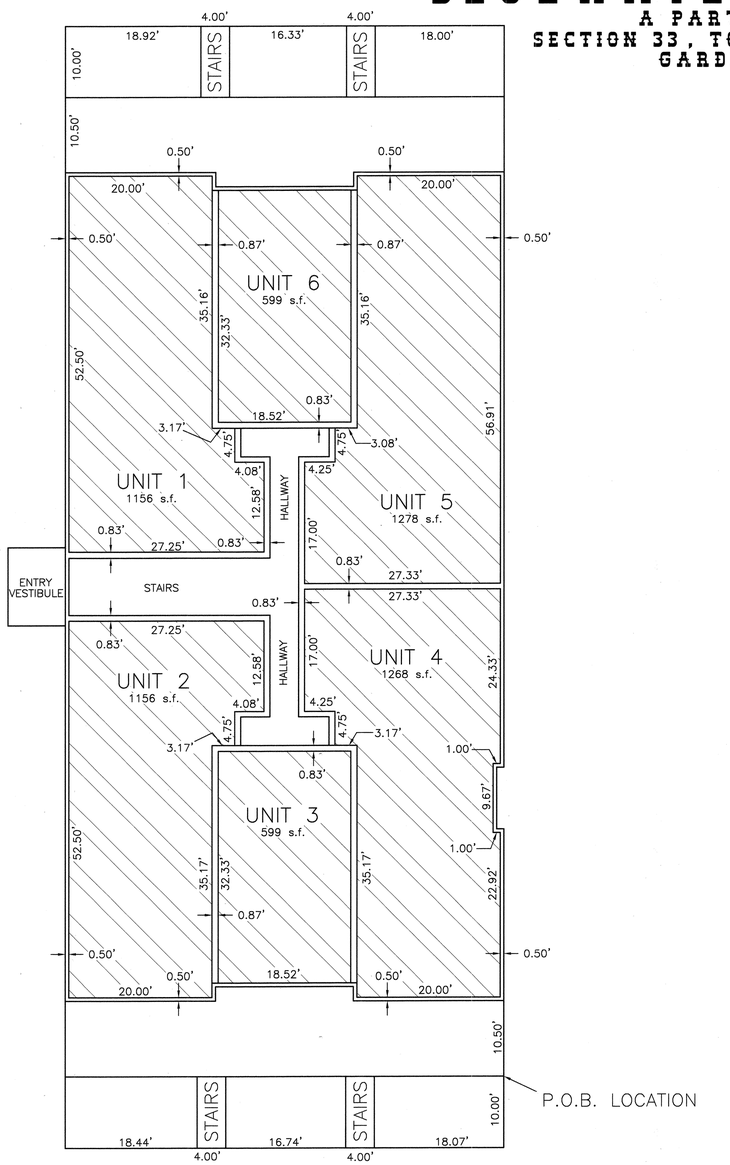

LOWER FLOOR PLAN

COMMON ELEMENTS

LIMITED COMMON ELEMENTS

PRIVATE UNIT

BENCH MARK IS
DEPT. OF NATURAL RESOURCES
BEAR LAKE CONTROL NETWORK
GPS MONUMENT #BL13
U.P.&L. DATUM 5946.42

SCALE = 1" = 10'

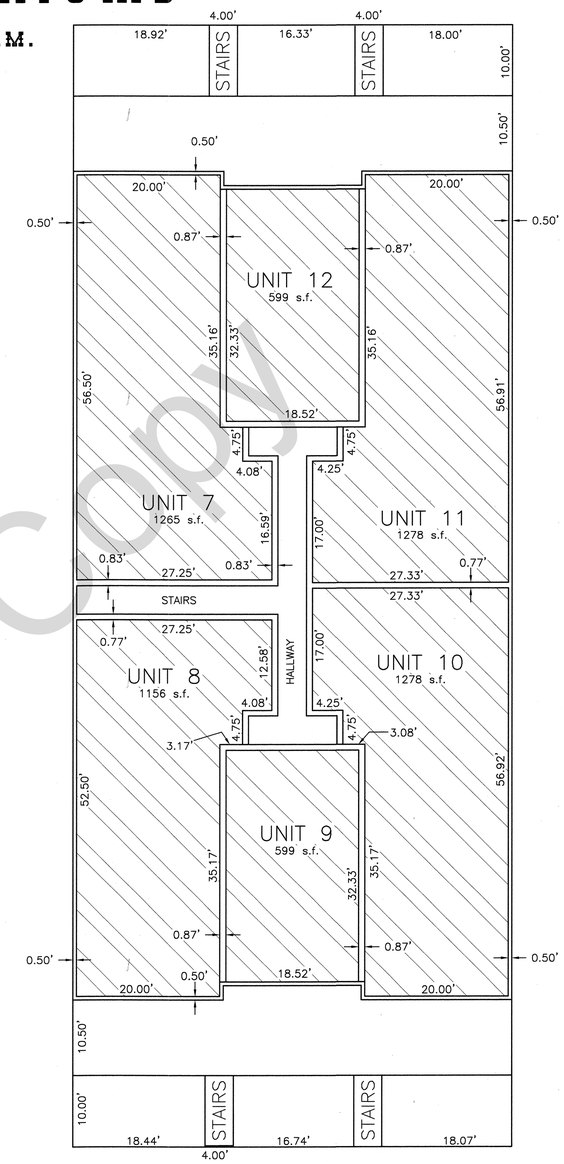

UPPER FLOOR PLAN

Internet Copy

JSH
SURVEYING & DRAFTING INC.
2820 SOUTH 600 WEST o NIBLEY, UTAH 84321
(435) 753-0268 * TOLL FREE 1-888-420-0268

JOB #: 03-226